CZ SP-01 SHADOW AIRSOFT COMBI
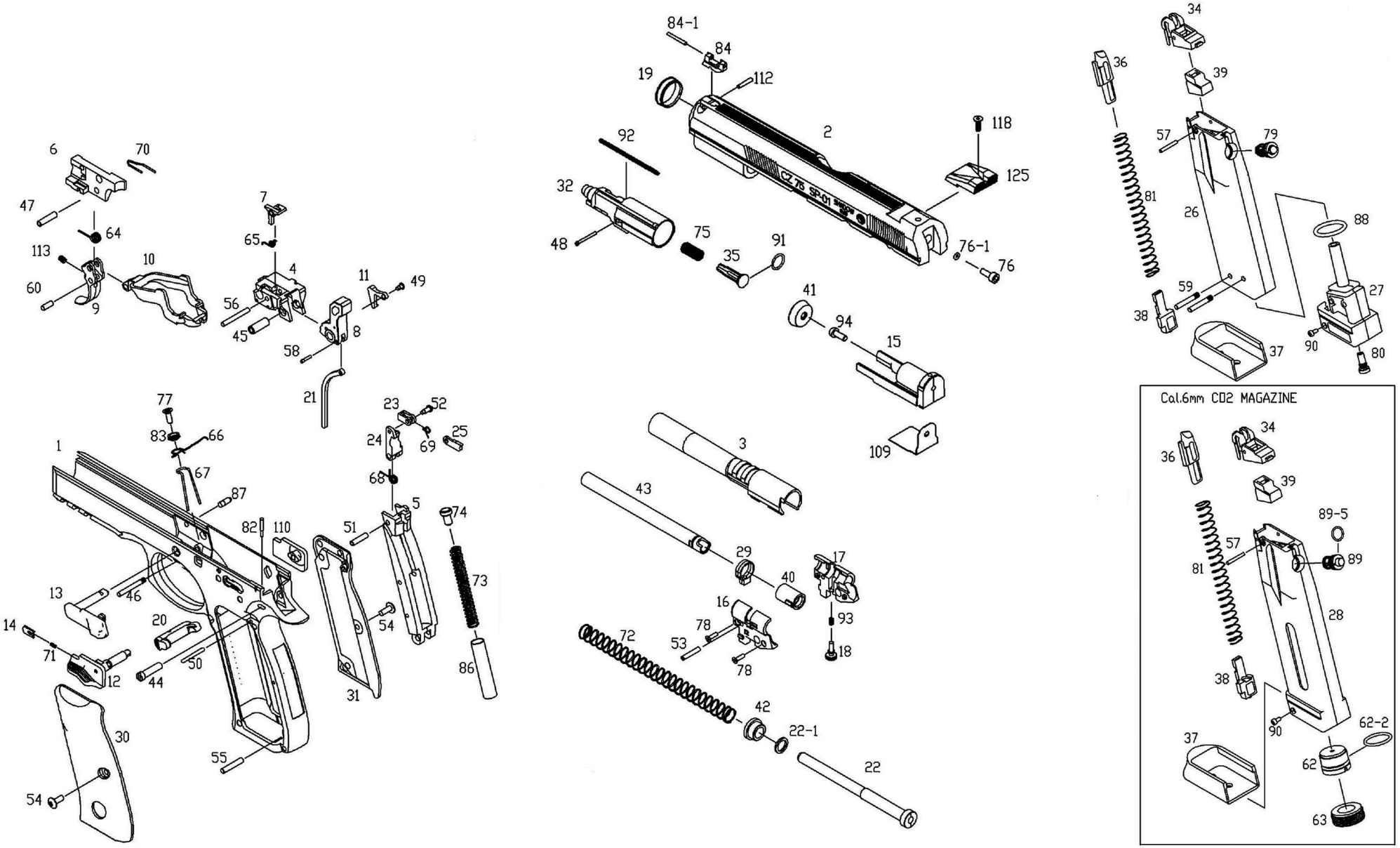
ref. 18409