M9 Airsoft, Full Metal, Dual source
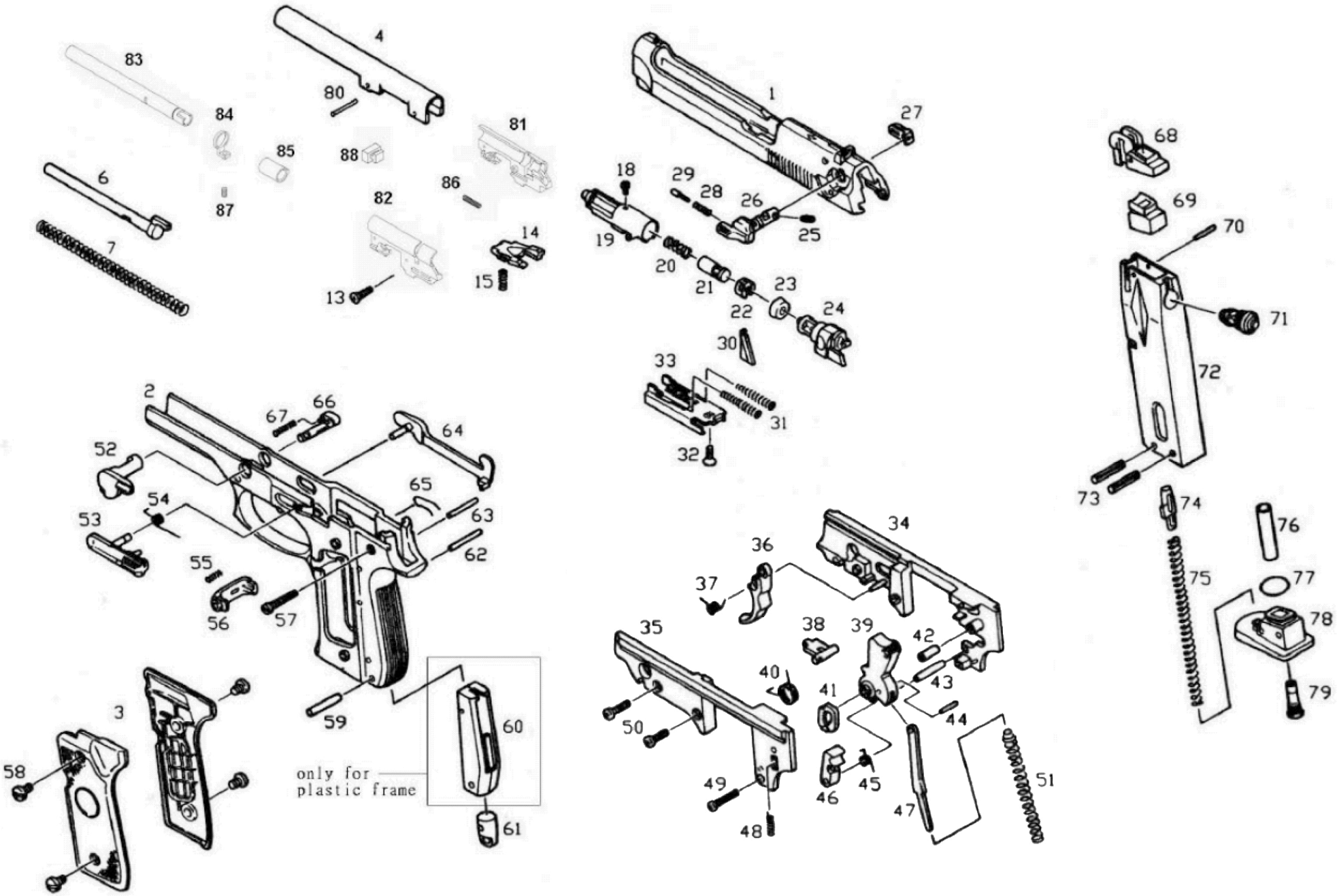
ref. 11112