CZ 75D Compact Airsoft, GNB, Adjustable Hop Up
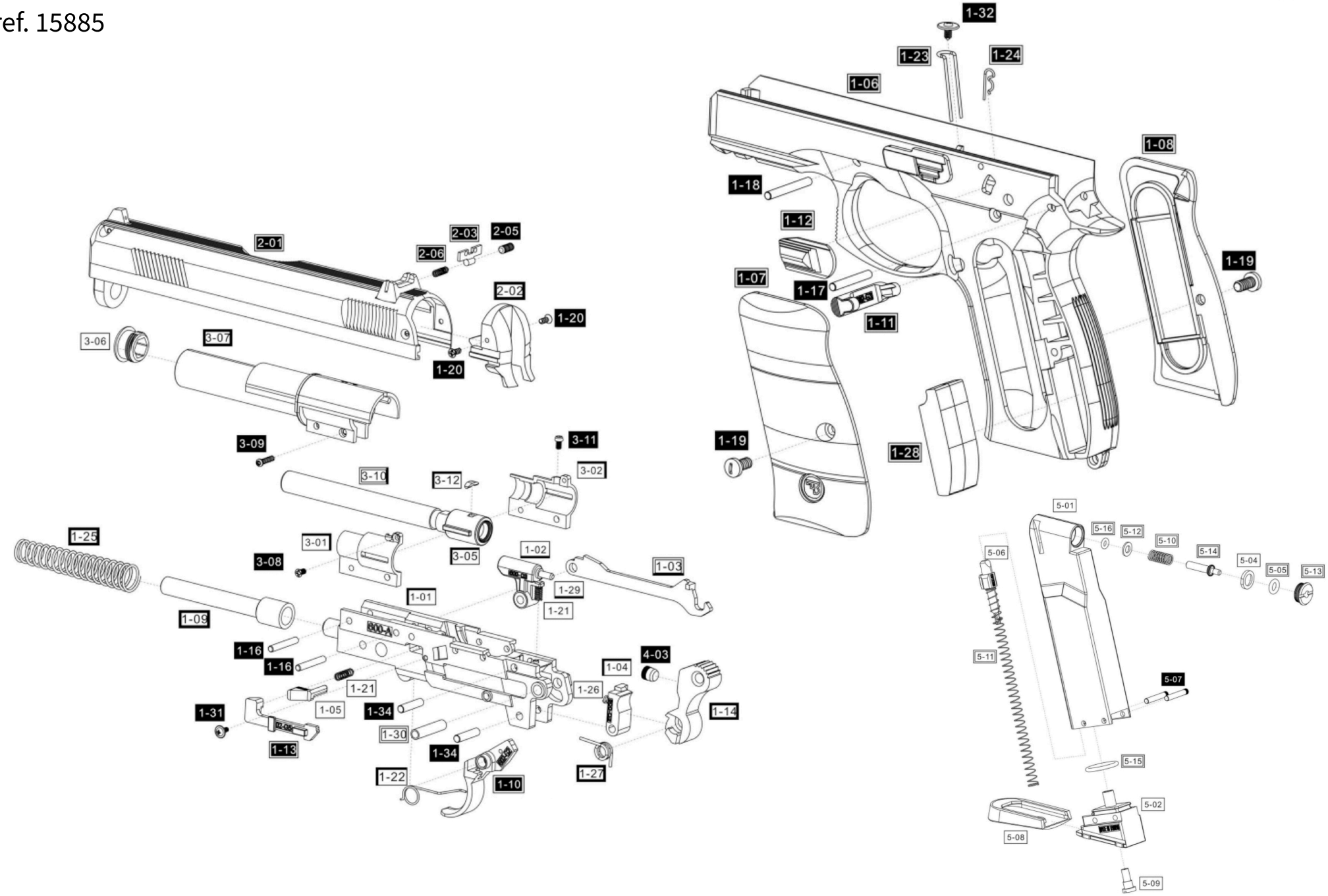
ref. 15885