CZ 75D Compact Airgun, BB, Non Blowback, Metal Slide, Dual Tone
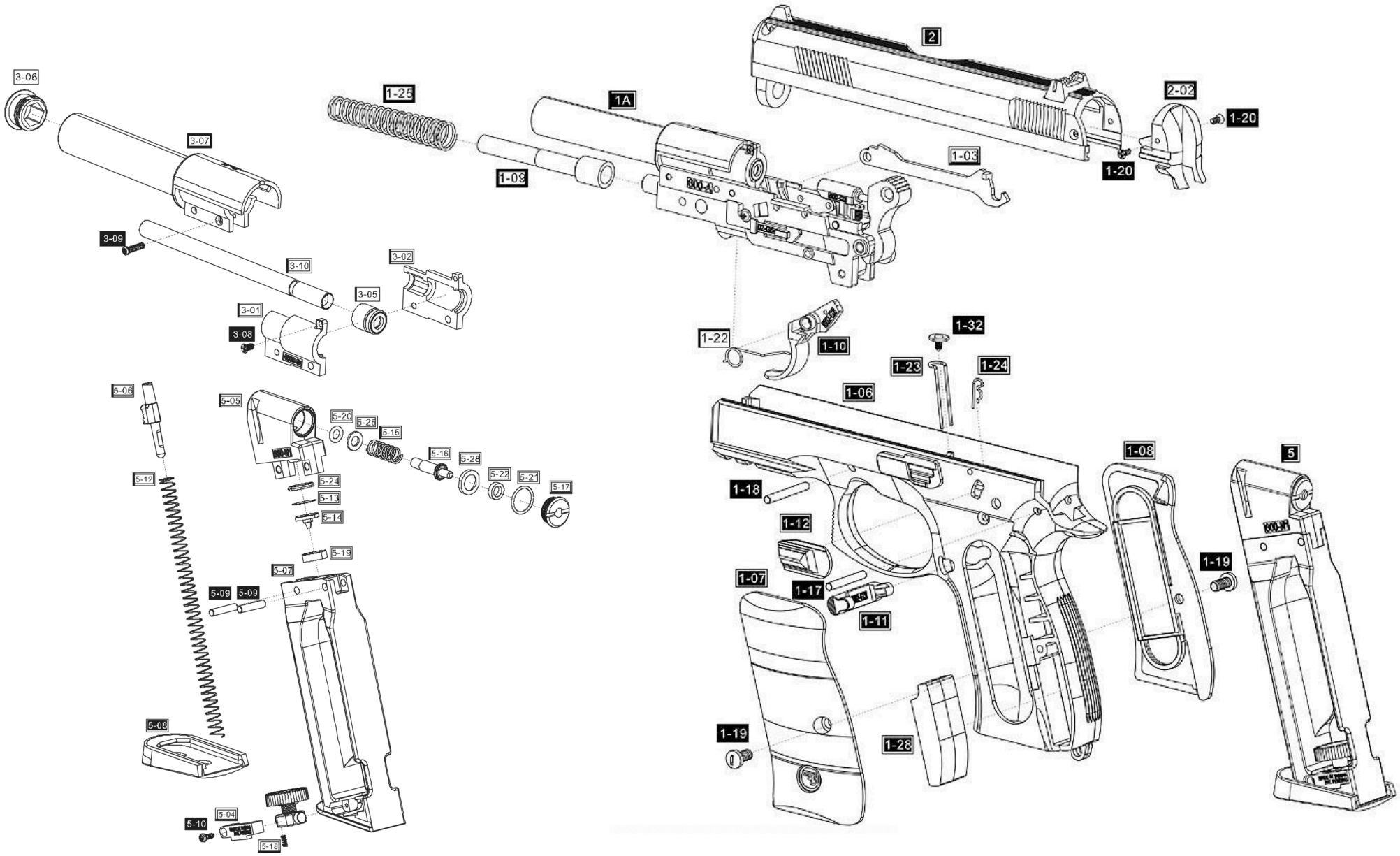
ref. 16200